INSTALLATION MANUAL

Folding Arm Awning (DS001)



ITEMS IN PACKAGE

1 pc pre-assembled frame with fabric awning.
2 pcs normaly mounting brackets (including Φ12 expanding bolts × 4, mounting M8 nuts × 2, bolts and washers).
1 pc manual crank.



Awning × 1



Manual Crank × 1

			
M12 Expanding Bolts × 4	Φ Mounting M8 Nuts × 2	Bolts × 2	Washers × 2


"H" Bracket × 2

Installation Instructions:

The manual awning can be easily installed in 30 minutes around. For safety & easy location of the awning, we recommend that 2 persons are required for lifting & positioning.

Tools Required:

- Power Drill
- 12/14/16mm Masonry Drill Bit
- Spirit Level
- Adjustable Spanner
- Resin (advised and recommended)

If in doubt about the quality of the wall structure you are wanting to mount the awning on, you can use an epoxy resin product to secure the mountings in the wall and always hire professional installers.



Power Drill



Spirit Level



16mm Masonry Drill Bit



Adjustable Spanner

STEP 1: Carefully remove the awning from the box and remove the styrofoam protectors from the awning, remove the plastic bags and plastic guards from the awning and carefully place the awning aside to avoid having it damaged by scratches or otherwise damaged or soiled during assembly.

Think about how you will be securing the awning to the wall ahead of time. In case you would like to mount it above a patio door, you should leave a space of at least 20cm above the door frame. If there is enough space available above the door frame.

STEP 2: Determine the height the awning of installation, considering the door's space & angle of slope, etc. And mark a horizontal line on the wall.



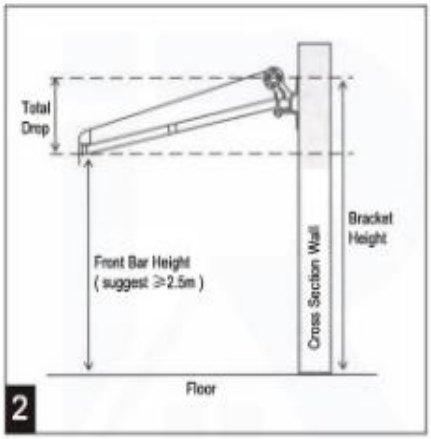

STEP 3: Fix the two brackets centrally (with Φ16mm expanding screw) into the wall in line with the horizontal mark. For optimum weight distrbution the brackets should be in suitable distance. For awning's width more than 3.5m, please consider add more brackets. The expanding bolts mentioned are only for hard wall and concrete wall, for loose and soft wall, it must adopt some other fixing methods.

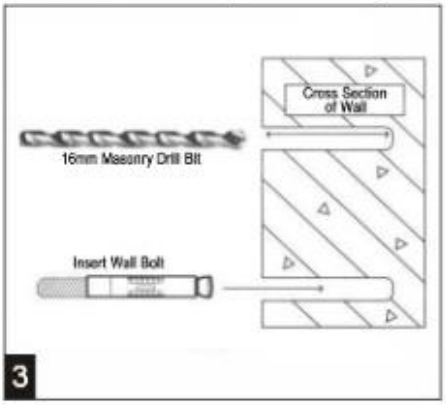

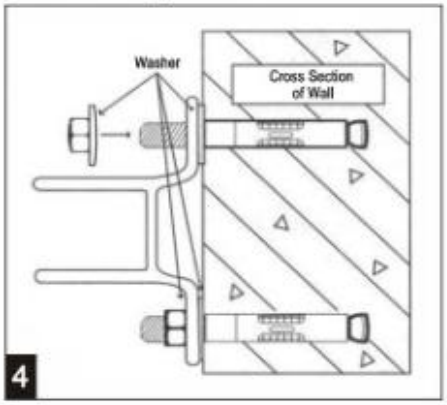

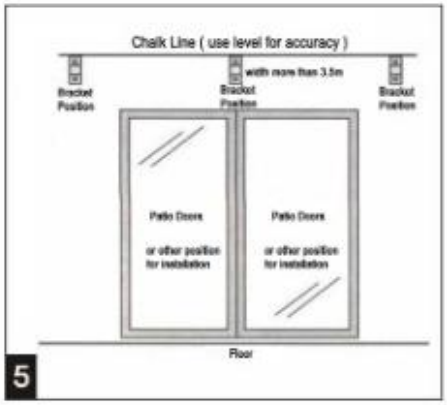

STEP 4: lift the frame & fill into the brackets, fix the awning with M8 bolts.
The angle of the slope can be adjusted, using the angle and alignment adjustment bolts on each side. Fully open the awning using your crank or remote transmitter on motorized awning, unplug the power cord from the outlet after opening the awning. Loosen the two locking nuts on the side, and loose the jack bolt on the arm shoulder, then you can adjust the jack bolt.

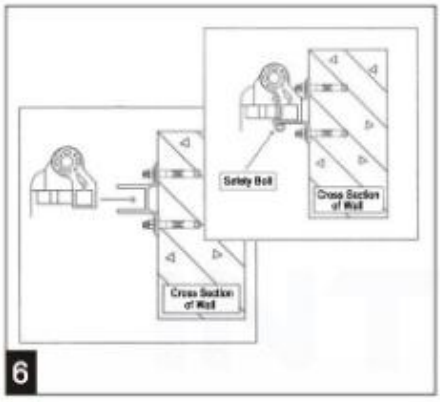

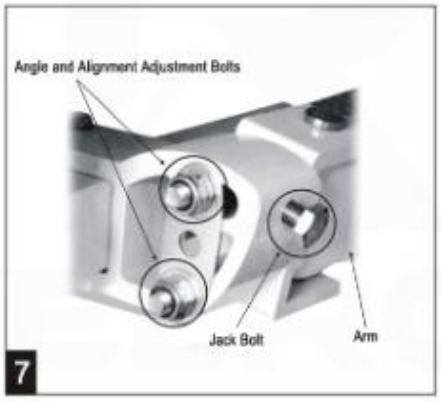

General Care & Precautions:

The awnings are constructed from weather resistant powder- coated metal and hard-wearing polyester or acrylic fabric. The awnings can be easily washed or sponged, but it should not be left for prolonged periods.

The awnings are internded to provide shade against direct sunlight, not as protction from the harsher factors such as rain. For safety it should be closed to aviod the strong wind (more than 5 grade) damage. Do not hang clothing on the awning.